IOTAFLOW
SYSTEMS PVT. LTD

Smart Single Jet Water Meter User Manual

" If You Want To Manage It, Measure It "

www.iotaflow.com

Table of contents

1. Subject matter of the manual 4
2. Technical data: reference standards and regulations 7
3. Operating principle of the water meters 8
4. Selecting the correct size of the water meter 9
5. Delivery inspection 9
6. Water meter installation requirements 10
7. Priming and commissioning 12
8. Maintenance, inspection and repairs 13
9. Storage and transport 13
10. Troubleshooting 13
11. Safety and environmental requirements 14
12. Installation diagram and standard pulse values for water meters 15
13. Disposal of waste products and packaging 16
14. Your feedback 16

Water meters:

- JS-05 and JS-07 Smart D+:cold and hot water; IP65

Version 07

Version 05

JS-02; -03 Smart C+:cold water and JS-02; -03 Smart + cold and hot water; IP65, (IP68 on request)

Version 02

Version 03

JS MASTER D+;C+; +; cold and hot water; JS-07; -08 (IP68 design) or JS (IP65 design)

Version 07 and 08

Version (IP65)

Version NK (IP65)

With gratitude for choosing our product, we would like to provide you with the operation manual for single-jet vane-wheel dry water meters with DN 15÷40 threaded connections. The water meters are manufactured by Apator Powogaz SA, in accordance with the procedures of the Integrated Management System for Quality, Environment and Safety. Please read the manual carefully before installing the water meter to ensure its intended use.

1. Subject matter of the manual

This manual defines the criteria for proper selection, the conditions for correct integration, operation and maintenance, as well as the rules regarding safety, environmental protection and disposal of single-jet vane-wheel water meters for the measurement of the volume of treated potable water DN15-40 and domestic and industrial water DN25-40 flowing in closed lines (pipelines).

Tabela 1. Types and applications of single-jet dry water meters

Type	Application/version
JS – (DN15÷40)	▪ Cold water min 0.1°C-max 30°C (50°C) Operating pressure max 1.6Mpa (16bar) ▪ -02 (JS DN15÷20) IP65 - basic version with 8-barrel counter adapted to communication modules with optical (IR) and/or inductive (TI) scanning of the counter dial, IP68 on request, ▪ (JS DN25-40) IP65 with 5-barrel counter adapted to communication modules with optical (IR) and inductive (TI) scanning of the counter dial, ▪ -03 (JS DN15÷20) IP65 - version with plastic body ▪ -05 (JS DN15÷20) IP65 basic version with 8-barrel counter adapted to communication modules with optical (IR) and inductive (TI) scanning of the counter dial – with non-removable clamping counter cover with seal and lid ▪ -07 (JS DN15÷20) IP65 - version as in -05 with a simplified cable tie and seal ▪ -07 (JS DN25÷40) IP68 basic version with 5-barrel counter adapted to communication modules with inductive (TI) scanning of the counter dial – with non-removable clamping counter cover with seal and lid ▪ -08 (JS DN25÷40) IP68 – version with control channel, with 5-barrel counter adapted to communication modules with inductive (TI) scanning of the counter dial – with non-removable clamping counter cover with seal and lid
JS-NK; (DN15÷40)	▪ IP65, cold water min 0.1°C – max 30°C(50°C), ▪ operating pressure max 1.6Mpa (16bar) ▪ NK – reed relay pulse transmitter ▪ version - brass body
JS90 - (DN15÷20) *JS130 – (DN25÷40)*	▪ Warm water: min. 0.1°C – max. 90°C ▪ Hot water: min. 0.1°C – max. 130 °C ▪ Max operating pressure: 1.6 MPa (16 bar) ▪ JS90 - version with brass or composite body
JS90-NK; (DN15÷20) *JS130-NK; (DN25÷40)*	▪ Warm water: min. 0.1°C – max. 90°C ▪ Hot water: min. 0.1°C – max. 130 °C ▪ Max operating pressure: 1.6 MPa (16 bar) ▪ NK – reed relay pulse transmitter ▪ version - brass body

Tabela 2. Mounting orientations

Water meter type	Mounted orientation			Counter position
	Horizontal	Vertical	Oblique	
JS; JS-NK; *(DN15÷40)*	x	x	x	*
JS90; JS90-NK; *(DN15÷20)*	x	x	x	*
JS130; JS130-NK; *(DN25÷40)*	x	x	x	* 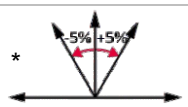

** deflection angle +/-5% according to PN-EN ISO 4064-5*

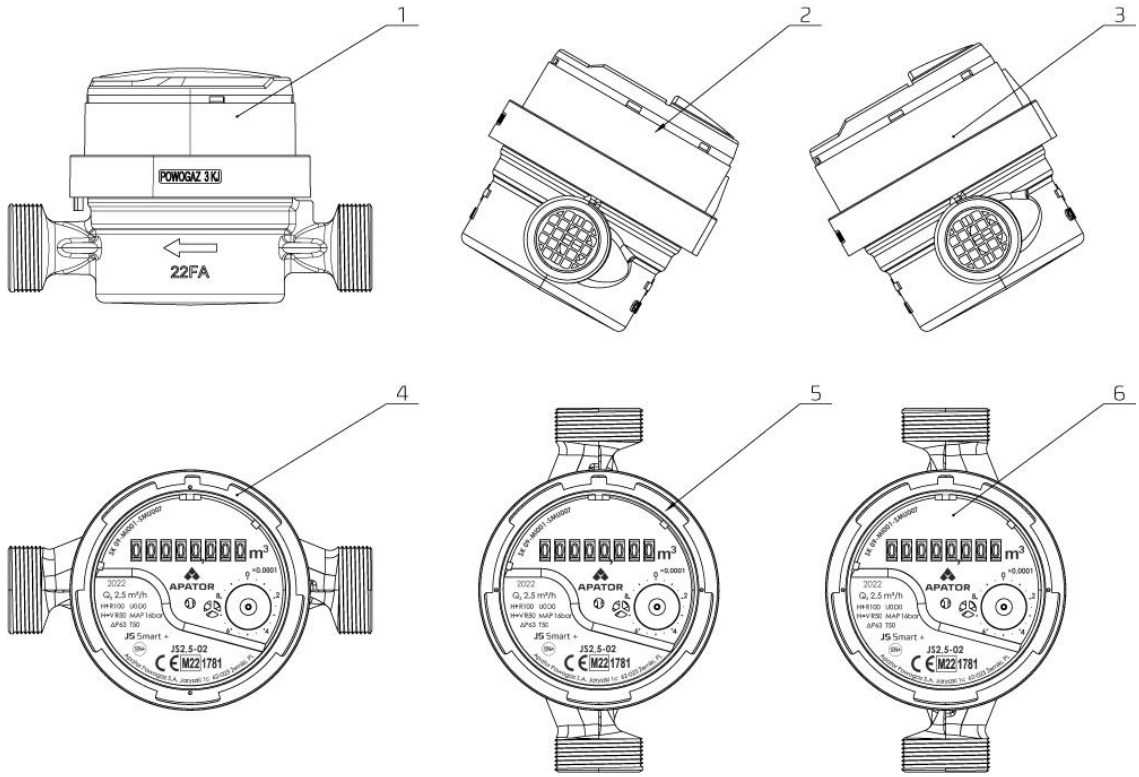

1 - horizontal orientation (R200 or R160 or R100 – H)
2, 3 - oblique orientation (R40 to R80 – V) - maximum permissible angle from the vertical +/- 5% according to the standard,
4 - horizontal orientation (R40 to R80 H)
5, 6 - vertical orientation (R40 to R80 – V)

Rys. 1. Examples of permissible installation positions of water meters manufactured by Apator Powogaz SA, type JS (DN 15-40).

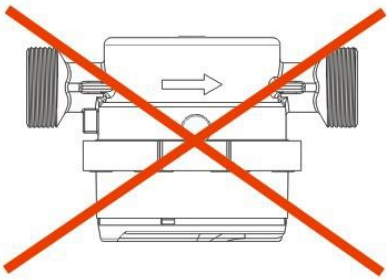

Rys. 2. Prohibited installation positions of water meters manufactured by Apator Powogaz SA, type JS (DN 15-40).

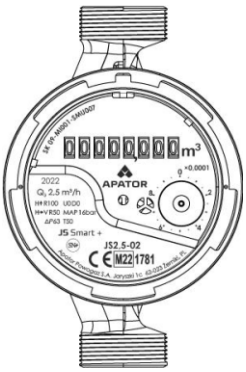

Rys. 3. Recommended position for the counting mechanism in vertical installation.

Example part designation marking of a JS water meter
basic version for cold water

JS - - 2.5 -0.2 – G1
JS 130 - 6.3 - NK – G1 ¼”
JS 90 - 2.5 - NK

- alternative connection
- pulse generator
- version
- permanent volumetric flow rate
- temperature class
- type

Tabela 3. Values of the permanent volumetric flow rate

Water meter type		
Q_3 [m^3/h]	Size (mm)	Length Thread [mm]-["]
1.6	15	110 – G3/4"
2.5*	15	110 – G3/4"
2.5	20	130 – G1"
4	20	130 – G1''
6.3	25	165 – G1 1/4" 260 - G1 1/4"
10	25	260 – G1 1/4"
10	32	260 – G1 1/2"
16	40	300 - G2''

*Upon request L=115 or L=80, inlet/outlet = 7/8/3/4'' for L=115

2. Technical data: reference standards and regulations

The technical data is specified in the Technical Data Sheets issued for specific water meter types.
The water meters meet the following standards and regulations:

1. Directive 2014/32/EC of the European Parliament and of the Council of 26 February 2014 on the harmonisation of the laws of the Member States relating to the making available on the market of measuring instruments
2. Polish Act of 13/04/2016 on market surveillance and compliance assessment systems
3. OIML R 49-1:2013 – Water meters intended for the metering of cold potable water and hot water. Part 1: Metrological and technical requirements
4. OIML R 49-2:2013 – Water meters intended for the metering of cold potable water and hot water. Part 2: Test methods
5. OIML R 49-3:2013 – Water meters intended for the metering of cold potable water and hot water. Part 3: Test report format
6. EN 14154-1:2005+A2:2011 – Water meters. Part 1: General requirements
7. EN 14154-2:2005+A2:2011 – Water meters. Part 2: Installation and conditions of use
8. EN 14154-3:2005+A2:2011 – Water meters. Part 3: Test methods and equipment
9. EN ISO 4064-1:2017 – Water meters for cold potable water and hot water. Part 1: Metrological and technical requirements
10. EN ISO 4064-2:2017 – Water meters for cold potable water and hot water. Part 2: Test methods
11. EN ISO 4064-5:2017 – Water meters for cold potable water and hot water. Part 5: Installation requirements

12. EN ISO 4064-4:2014 – Water meters for cold potable water and hot water. Part 4: Non-metrological requirements not covered in ISO 4064-1.
13. Polish Regulation of the Minister of Development dated 02 June 2016 and concerning requirements for measuring instruments.
14. Polish Regulation of the Minister of Entrepreneurship and Technology dated 22 March 2019 concerning legal metrological control of measuring instruments.
15. Classification of environmental climate and mechanical conditions: Class B (ref. EN-ISO 4064-1: 2017 and OIML R49-2:2013).
16. Classification of mechanical environmental conditions: Class M1, as per Directive 2014/32/EC of the European Parliament and of the Council of 26 February 2014 •17.
17. Classification of environmental electromagnetic conditions: Class E1, E2 (ref. EN-ISO 4064: 2014

The water meters in production may vary from PN-EN 14154 in installation length. This depends on the specific needs of the end user.
The following standards specify the basic requirements for installation of the water meters:
PN-B- 10720 - Waterworks. Installation of water meter sets in water supply systems. Acceptance requirements and tests.
PN-EN 14154-2: Installation and conditions of use.
EN ISO 4064-4:2014 – Water meters for cold potable water and hot water. Part 4: Non-metrological requirements not covered in ISO 4064-1.
EN ISO 4064-5:2017 – Water meters for cold potable water and hot water. Part 5: Installation requirements

3. Operating principle of the water meters

Single jet dry water meter - JS
The single-jet dry water meter consists of two main assemblies: the metering unit and the counting mechanism. The main components of the metering unit are: a body with a strainer located in the inlet channel, a vane, and a sealing plate. The main components of the counting mechanism are: a gear assembly, a barrel assembly and a counter cover. The mechanism is attached to the unit by means of an attachment ring, which at the same time can act as a seal and provides protection against tampering.

The rotor of a single-jet water meter is driven by the flow of water pushing against its vanes along the circumference and is the only moving part immersed in water. Rotor rotation is transmitted via a front magnetic coupling through a sealing plate. A dry counter, encapsulated in a separate module, totals the volume of water metered and indicates the result in digital form - easy to read. The counter is equipped with a movement indicator for automatic adjustment and verification. Thanks to the special design of the rotor bearings and the selection of corrosion- and abrasion-resistant materials, the water meter has a long service life.

4. Selecting the correct size of the water meter

The sizing criterion (for DN, the nominal diameter) of the water meters shall always be the operating conditions, i.e. the minimum, mean and maximum operating volumetric flow of water. A water meter that is too large not only increases the purchase costs, but also reduces the water measurement indication accuracy when the water flow is low.

A water meter that is too small overstresses the mechanism, resulting in premature wear of the moving components. Hence, to have your water meter perform properly within its measurement range limits and maximum indication error limits, its daily operating range shall be precisely determined; this can be done based on the monthly water demand, considering maximum transient volumetric flow values.

It is recommended to choose a water meter size such that the highest anticipated volumetric flow rate in the system corresponds to 0.45 to 0.6 of the permanent volumetric flow rate Q3 of the water meter. The permanent volumetric flow rate values for specific water meter types are listed in Table 3.

5. Delivery inspection

The water meter as supplied by the manufacturer requires inspection to verify that no external shipping damage is present, especially on the body, the threaded stubs, the counter cover, and the wiring (if the version includes a transmitter module).

Check the marking of the water meter and the condition of the clamping ring or seal, which act as legal and security features.

The following markings are placed on the counter dial, the rating plate or the body of the water meter:

- manufacturer's name and logo,
- type-approval certificate number,
- MID type examination marking;
- identification of the measuring instrument,
- water meter number,
- the metrological marking comprises the capital letter M and the two last digits of the production year in which the marking was applied to the measuring instrument,
- direction of the flow, shown with an arrow,
- V, H mark for vertical and horizontal piping water meters,
- H mark for horizontal piping water meters,
- H/V mark for horizontal and vertical piping water meters,
- volumetric flow value, Q3 in m^3/h,
- measurement unit designation in m^3 (see the counter scale);
- maximum pressure loss,Δ,
- maximum pressure limit: PN 16,
- manufacturer's address

6. Water meter installation requirements

6.1.

The installation location should provide easy access for the process of installation, removal, servicing, and reading, and be separated from rooms in use or for storage. Protected from adverse weather conditions and protected from the effects of electrical and gas installations. If there is no installation location suitable according to these criteria, the water meter can be installed in a dedicated chamber, but the installation location inside it shall be sufficiently high above the chamber bottom. The chamber must have a sediment trap or a water drain discharging to the outside

6.2.

The water meter at its installation location shall not be exposed to shocks or vibration from nearby equipment in operation or excessively high ambient air temperatures, or contaminants, or flooding with water, or corrosive ambient agents. The installation location temperature shall be lower than 4°C. Protect the water meter from hydraulic turbulence, including cavitation and water rams

6.3.

valves shall be provided upstream and downstream of the water meter in order to shut off the water supply in case of necessity of removal for inspection or repair, with the possibility of completely uncovering the cross-section of the supply pipe

6.4.

If the water flow is expected to be contaminated during operation of the water meter install a suitable filter or trap between a straight upstream section of the piping and the upstream stop valve

6.5.

To prevent the installation fastening from stressing the water meter body, it is recommended to use expansion (deflection) couplings installed on the meter's discharge side. The coupling shall permit the reduction of the length by telescopic sliding of its sleeve

6.6.

The piping route geometry at the installation location shall prevent air blocks from forming within the installation length of the water meter. The water meter must remain completely filled with water, so the water supply piping downstream of it must not have a drop in the downstream direction (see Fig. 4). It is recommended that the water supply system is routed in such a way that it can be drained by gravity using a drain cock located at the lowest point of the water supply pipe.

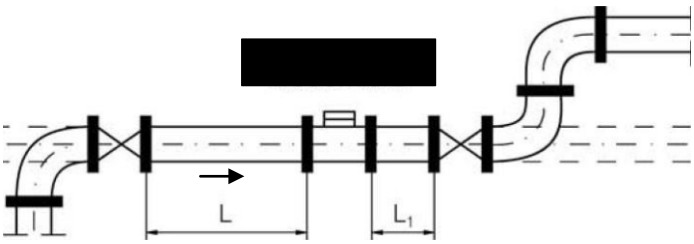

Rys. 4. Installation of the water meter.

6.7.

Prevent overstressing of the water meter due to the attached piping or other equipment. If necessary, install the water meter on a pedestal or a bracket. The upstream and downstream piping must be properly fastened so that no component of the system shifts by the action of water when the water meter is removed or detached on one of its ends.

6.8.

The installation of the water meter in the system must conform to the intended operating orientation (horizontal, vertical and oblique, as applicable by specification) (see Table 2).

6.9.

When using typical connectors to incorporate the water meter, no other straight sections upstream (U0) and downstream (D0) of the unit are required.
However, if the unit is installed downstream of a double elbow, non-return valve, filter, pump or other fitting which significantly disturbs the flow profile, a straight section upstream of the unit with a length of L=5×DN (nominal diameters of the unit) (U5) and downstream of the unit with a length of L1=3×DN (D3) shall be provided (Fig.4).

7. Priming and commissioning

7.1.

Before installing a water meter in the piping, flush the piping to remove all debris and contamination. If a filter is to be used, it shall be cleaned before the installation process. For the flushing process, the water meter shall be replaced with a straight pipe spool.

7.2.

Prior to its installation do a functional test of the water meter: spin its rotor and inspect for proper rotation of the rotor or the counter pointers. Check the condition of the retaining ring or the condition of the seals.

7.3.

Once the water meter has been installed, water shall be fed into the pipeline slowly and with the vents open, so that the air leaving the system does not cause excessive rotation of the water meter rotor causing damage to the rotor.

7.4.

During operation, the stop valves upstream and downstream of the water meter shall be fully open.

7.5.

Having completed the aforementioned commissioning tasks, verify that the water meter is operable: its reading should increase as the water flows.

7.6.

During the operating stage, periodically check that the actual operating conditions meet the intended use of the water meter, especially the maximum operating pressure, temperature and flow rate values.

8. Maintenance, inspection and repairs

The measurement performance of the water meter will become reduced throughout its operating life. The deterioration of these properties is generally due to the aggressive action of water. Hence, every water meter, upon noticing an irregularity in operation, shall be disassembled and cleaned in order to determine the reasons for such a state of affairs. Whereas the water meter after the expiry of the conformity assessment/verification period. It shall be overhauled/refurbished in connection with secondary verification or it may be replaced with a new one.

The validity periods for conformity assessment are defined in the metrological regulations. Every time the water meter is removed from a water system, it must pass a reference indication accuracy before its disassembly and cleaning. Do not clean with agents detrimental to the materials of water meter parts. Do not clean the water meter parts with any corrosive agents or solvents (this applies specifically to plastic parts) or agents which accelerate ageing of seals.

Repairs should be carried out at properly prepared authorised service centres.

In the case of repairs involving the necessity of replacing components, only original spare parts supplied by Apator Powogaz S.A. shall be used. Once repaired, water meters are subject to inspection in accordance with current regulations.

9. Storage and transport

The brand-new or repaired water meter shall be kept with the counter upwards or to the side in an indoor room free from all corrosive vapour, odours, etc. agents which might be detrimental to the water meter. The indoor storage temperature shall be between 5°C and 30°C at a relative air humidity not exceeding 80%. Protect the device in storage and during transport from vibration and shock which may damage the enclosure or internal components. Transport the meter in sheltered vehicles, in its original packaging or its substitute, whichever fully protects the meter from damage.

10. Troubleshooting

If the counter does not indicate when water is flowing through the water meter, check whether the rotor is obstructed due to contamination. If, after any cleaning, the water meter does not function and in any other case of non-functioning, the water meter shall be submitted for repair with a description of the abnormality. If the pulse transmitter module fails, report this to the supplier. If the troubleshooting is ineffective despite any instructions received from the supplier, have the water meter repaired.

11. Safety and environmental requirements

11.1.

The water meter is a measuring instrument which is safe to use, provided it is installed properly and operated according to its intended use.

11.2.

Direct residual hazards exist during installation servicing and operation of the water meter:

- mechanical hazards:
  - fall during improper handling
  - water leaks, leading to flooding of the water meter due to improper installation or a water pressure exceeding the rated MOP;
- thermal hazards:
  - burns from touching the water meter while it is in operation or a leak of hot water.

11.3.

The mechanical hazards are reduced by the outer geometry of the water meter which facilitates handling. The thermal hazards can be prevented by application of dedicated guards.

11.4.

The installation and servicing of the device requires a suitable location with firm ground that will not cause a hazard of falling.

11.5.

The water meter components are not harmful to human health or the environment. All cold water meters are delivered with hygiene certificates for use with drinking water.

11.6.

The use of counter seals and other design solutions protect the water meter from the negative effects of condensation on the correct indication reading or the operation of the pulse transmitters.

11.7.

Classification of environmental conditions

- Classification of mechanical environment conditions: Class M1 (ref. Polish Regulation Dz.U. 09.06.2016)
- Classification of mechanical and climatic environmental conditions: 5°C to 55°C in confined or open locations (ref. Polish Regulation Dz.U. 09.06.2016).
- Classification of electromagnetic environment conditions: Class E1 (ref. Polish Regulation Dz.U. 06.06.2016)

12. Installation diagram and standard pulse values for water meters

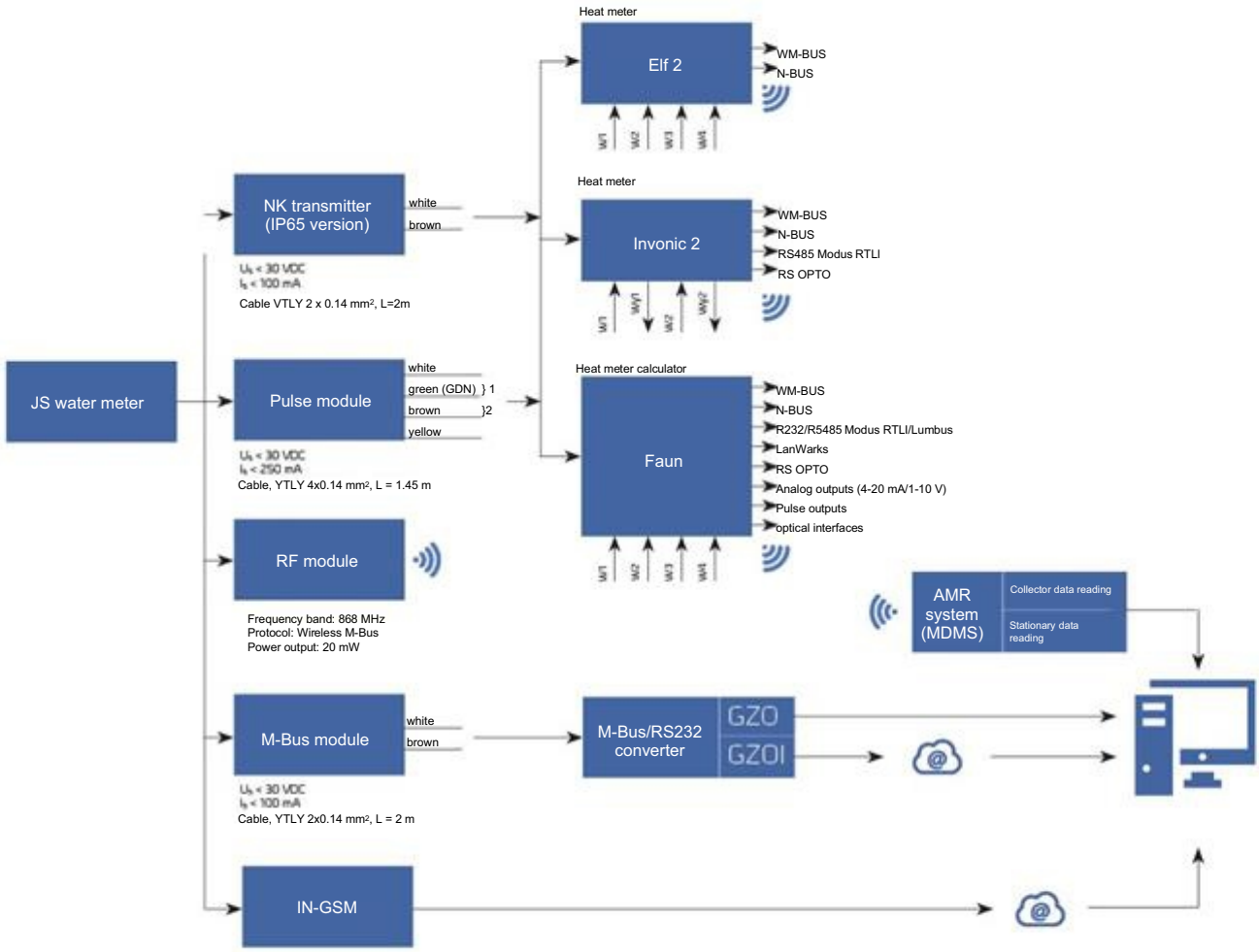

Rys. 5. Diagram of example connections for the implementation of remote indication transmission.

12.1.

Standard water meter version pulse value for the NK transmitter module.

Tabela 4.

Q_3 [m^3/h]	Size (mm)	Pulse value [dm^3]
1.6	15	10
2.5	15	10
2.5	20	10
4	20	10
6.3	25	10
10	25	10
10	32	10
16	40	100

12.2.

It is possible to order other pulse values than the basic (factory) version for the NK transmitter according to the data sheets. In the case of such an order, the pulse values will be in accordance with the customer requirements specified in the order.

12.3.

Transmitter cable extension
To extend the standard transmitter cable, it is recommended to use a shielded cable with a cross-section taking into account the recommendation that the total impedance of the extended section of single conductor of at least 0.75 mm shall not exceed 500 Ohm. Note that the transmission cable extension line must not intersect the existing power and data lines. Note: Make the extension line as short as possible.

13. Disposal of waste products and packaging

The packaging is made of corrugated board, which can be reused.
Otherwise, you can dispose it at a waste paper collection point. Detailed information on the recycling of individual water meter materials, as well as how to dispose of waste correctly, can be obtained from the relevant company departments.

14. Your feedback

The Operating Manuals for our products are subject to continuous updating. Your improvement suggestions are most welcome and allow us to optimise the Operating Manuals according to your needs. Please communicate all your feedback about this Operating Manual and the operation of water meters to the manufacturer.

CAUTION!
Due to continuous development, the manufacturer has the right to modify its products in ways not reflected in the Operating Manual without altering the primary device type characteristics.

IOTAFLOW
SYSTEMS PVT. LTD

Smart Single Jet Water Meter User Manual

Contact Us:-

IOTAFLOW SYSTEMS PVT. LTD.

C-2/13, Mayapuri Industrial Area
Phase-II, New Delhi - 110064
Call: +91-9910693866
+91-9779085987
Email: contact@iotaflow.com

Specifications subject to change without prior notice. © Iotaflow Systems Pvt. Ltd.

" If You Want To Manage It, Measure It "

www.iotaflow.com